AUSTRALIAN DESIGNED, MADE AND OWNED!

Harness the *power* of

The world's healthiest, coolest, quietest most energy-efficient evaporative air conditioners ever![1]

100% *healthy*
fresh filtered air
for total comfort

up to
80% *cheaper*
to run than reverse
cycle air conditioning[2]

Evaporative Air Conditioning

Breezair By SEELEY INTERNATIONAL

Braemar By SEELEY INTERNATIONAL

coolair By SEELEY INTERNATIONAL

Harness the *po*

At Seeley, we harness the power of wind and water.

There's a natural attraction between air and water that is powerful...

Outside, these forces of nature live all around us. But, what if we could harness this power inside too?

Our evaporative air conditioning technology has been inspired by nature with beautiful design, incredible reliability and unsurpassed cooling performance using 100% fresh outside air - the only air you want to breathe!

Today, you can harness that power too.

Seeley International is renowned for world-class design and innovation, striking that delicate balance between form and function, just like nature.

We have a range of evaporative coolers that would seamlessly integrate with all roof lines without compromising on comfort, quality or environmental credentials, through to our traditional range that also deliver efficient, natural cooling for long lasting comfort.

Since day one, nearly 50 years ago, our company has been about challenging mindsets and stretching the imagination. Trust, reliability and innovation have been the cornerstones to success. It's no coincidence that Seeley International is the most awarded air conditioning manufacturer in Australia. We export our amazing products all around the globe.

At Seeley International, we don't settle for ordinary, and neither should you.

Frank Seeley

AM, DUniv *Flin*, FAICD
Founder and Executive Chairman

wer of nature

Harness the *healthiness* of 100% fresh air, the only air you want to breathe!

Award Winning Company

Seeley International consistently wins awards each year for new product design, innovation and environmental friendliness.

Recent awards include:

GOOD DESIGN Award

THE AUSTRALIAN BUSINESS AWARDS ABA100 NEW PRODUCT INNOVATION WINNER 2016

melbourne design awards

FBA Family Business Australia Distinguished Family Business of the Year 2019

HALF A CENTURY OF Exporting Excellence 2018 BUSINESS SA EXPORT AWARDS WINNER

sydney design awards

THE AUSTRALIAN BUSINESS AWARDS NEW PRODUCT INNOVATION WINNER 2017

Front cover: 1.Based on published research articles, NATA certified laboratory test results and publicly sourced data.
2.Seeley International's calculation based on approximate running cost figures from publicly sourced data.

Australian designed, made and owned

Built by Australians, for an Australian climate.

Seeley International is proudly a 100% Australian owned company, designing and manufacturing world-leading air conditioning products for Australia and the world. As Australia's largest air conditioning manufacturer, we are a global leader in developing ingenious, energy-efficient cooling and heating products. Being made in Australia, you can rely on build quality, availability of parts and after sales service. We're extremely passionate, and dedicated to strengthening the Australian economy, supporting local employment and building on the skills of our workforce.

Why evaporative air conditioning?

The most healthy and energy efficient cooling experience for your home

Evaporative air conditioning delivers a natural, exceptionally healthy cooling experience in the place where people spend **most** of their time - **HOME**. Bringing an **endless supply** of **100%** fresh, cool, filtered outside air into the home, not taking moisture from the air, which **combats** dehydration. It is environmentally friendly as it does not use harmful refrigerants containing HCFC's or HFC's. It produces less CO_2 emissions than reverse cycle air conditioning due to its efficient, low energy use whilst cooling your whole home, and everyone in it. **PLUS evaporative air conditioning** drives everyone's **second-hand air out of the home**, along with the brain-numbing CO_2 which everyone exhales - making this the **HEALTHIEST** air conditioning.

It's kind to you, kind to the environment, kind to your cash-flow, making evaporative cooling the natural choice.

The healthiest choice

Improving the health, wellbeing and vitality of the whole family. Not taking moisture from the air, which combats dehydration.

Lowest running cost in Australia

Up to 80% cheaper to run[2]

Save up to 80% on energy bills when compared to a reverse cycle air conditioner.

Fresh, cool clean air

Delivers **100% fresh**, filtered outside air, expelling the stale recycled air, and naturally cooling your **whole** home.

Quiet to run

Ask your dealer for a demonstration - see how **cool and whisper quiet** it is!

Built to last

Quality that lasts. Up to 7 years comprehensive warranty[3]

Australian designed, made and owned!

Manufactured by family owned Seeley International, Australia's largest air conditioning manufacturer.

Environmentally friendly

Produces up to 80% less CO_2 emissions~ - that's the equivalent of **planting 16 gum trees!**~

~Refer to page 7.

NATA Testing

NATA accredited laboratory test results substantiate superior product performance claims.

Technology that puts you in control

MagIQTouch® Controller technology for complete control of your comfort at home.

Low maintenance

Innovative design, minimising long term servicing.

Ultimate lifestyle

Perfect for alfresco living and busy families where children and pets keep coming in and out.

Minimal water usage

Evaporative air conditioning uses up to **94% less water** per year than a shower[4]

2.Seeley International's calculation based on approximate running cost figures from publicly sourced data. Comparison with 1.5 star not zoned ducted refrigerative system in a large size (220m²) 2-star pre 2005 house in a Melbourne climate, cooling all day on the weekend and in the mornings and evenings when internal temperatures are high, and an electricity tariff of 31.9c/kWh. Negligible water cost excluded. 3.The 7 year comprehensive warranty is available exclusively (i.e. only) from Seeley International participating dealers. The warranty has terms and conditions, including the requirement for servicing of the product in accordance with the owner's manual. In the fourth year the service must be performed by Seeley International or its appointed nominee. 4.Water use calculations for shower are based on shower water use for 4 people, 7 mins per person per day at 9L/min, over twelve months, calculated at 91,980 L. Water use calculations for Braemar unit LCB450 evaporative air conditioner over twelve months are 5,405 L.

Start enjoying **world-leading** evaporative air conditioning and become... **Healthier**, **Wealthier** and Environmentally **Wiser**!

Seeley International and your health

Evaporative air conditioning is better for you. Here's why:

- Evaporative air conditioners **continually cool and deliver 100% fresh, filtered, OUTSIDE AIR,** whereas reverse cycle air conditioners **re-circulate air** that you've **all been breathing and living in** for hours, and maybe days. This re-circulated air contributes to a build-up of CO2 in the home and CO2 is known to have an adverse effect on human health and well-being.
- Evaporative air conditioning naturally moisturises the air so **NO-ONE** suffers from the dryness caused by reverse cycle air conditioning.

Up to 80% cheaper to run

Using highly efficient inverter motors, our evaporative air conditioners deliver savings of up to 80% on your energy bills when compared to ducted reverse cycle systems. That's a **saving of up to $250 per year!**[2]

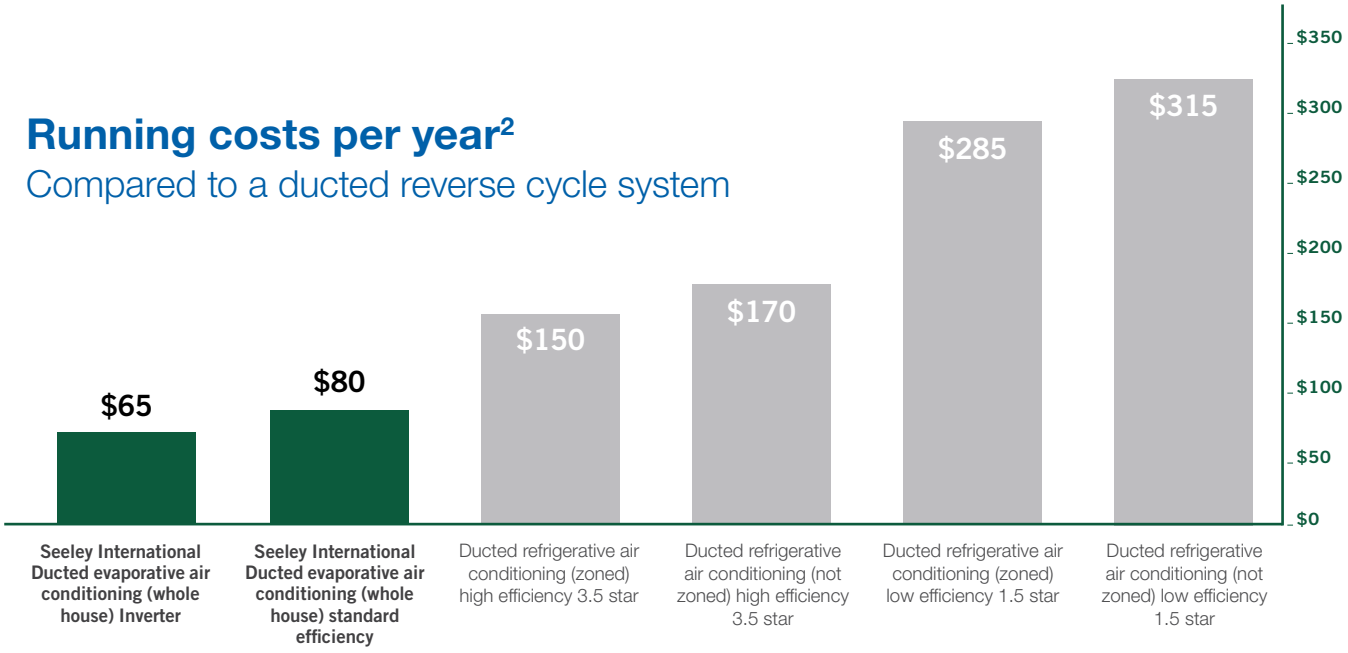

Incorporating

InvertaCool® technology

- Quieter operation.
- Greater air flow control.
- Ultra-energy efficient, lower carbon emissions.
- Lower power bills.

2.Seeley International's calculation based on approximate running cost figures from publicly sourced data. Comparison with 1.5 star not zoned ducted refrigerative system in a large size (220m²) 2-star pre 2005 house in a Melbourne climate, cooling all day on the weekend and in the mornings and evenings when internal temperatures are high, and an electricity tariff of 31.9c/kWh. Negligible water cost excluded.

Minimal water usage

Our water saving features:

- Superior water distribution system
- Water quality monitoring
- Auto-Clean™ - Automatic water drainage

The result: Minimum water usage for maximum, fresh cooling power.

Water consumption comparison across household appliances[4]

9L/min water efficient shower head
4 people daily, taking 7 minute showers: **91,980 L/year**

Garden Watering (including sprinklers)
120 mins per water at 20 litres per minute - 2x per week and 3x in Summer months:**57,600 L/year**

Toilet
35 flushes per week, per person in a 4person household, average 5L per flush:
36,400 L/year

Washing machine
Based on 70L/load, 5 loads per week: **18,200 L/year**

Seeley Evaporative A/C[4]
Based on 12 months usage: **5,405 L/year**

Reduce your carbon footprint

The power consumption of just one ducted refrigerated air conditioner can result in up to 1.4 tonnes of harmful CO_2 being pumped into the atmosphere each year. By purchasing a Seeley International evaporative air conditioner, which uses water, a **renewable resource**, to cool, you'll **reduce your impact on the environment** by producing up to **80% less CO_2 emissions[5],** when compared to a ducted reverse cycle air conditioner.

CO2 Emissions (kg/Yr)[5]

CO_2 savings equivalent to **planting 16 gum trees![6]**

Compared to a ducted reverse cycle system

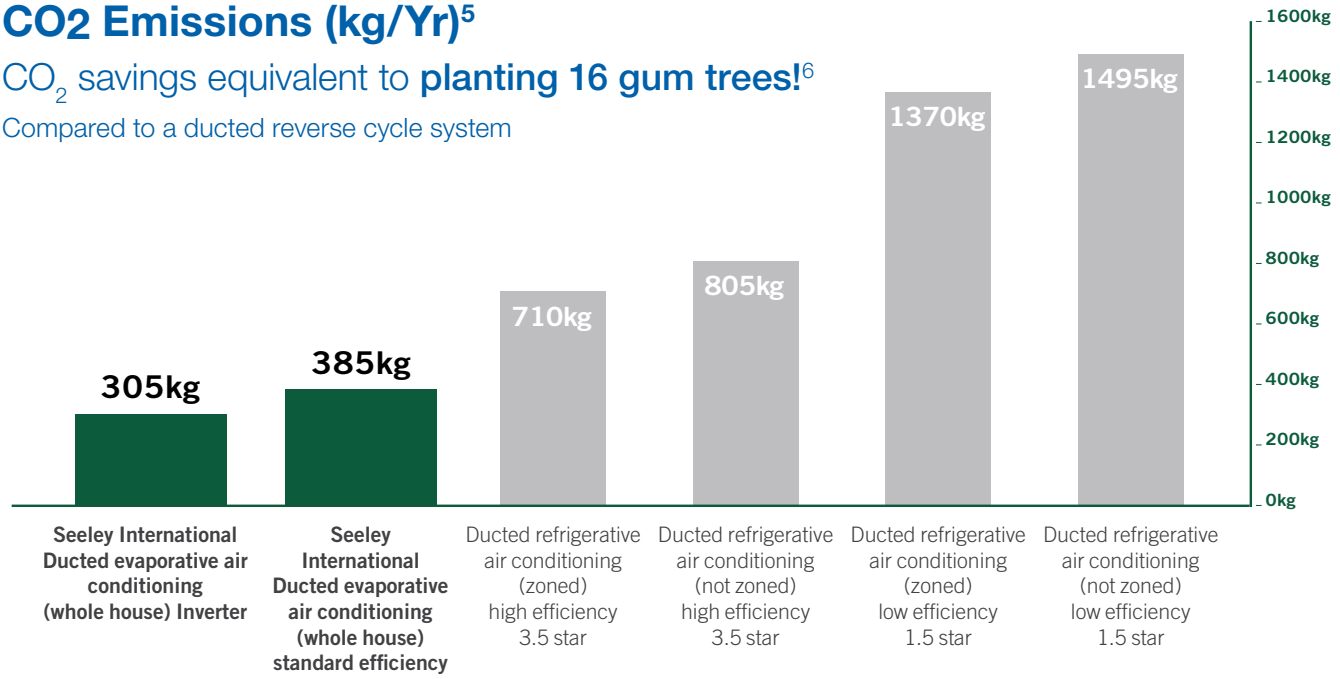

4.Water use calculations for Braemar unit LCB450 evaporative air conditioner over twelve months are 5,405 L. This comparison is based on usage in an average-size Australian home with 4 occupants.
5.Seeley International's calculation based on approximate greenhouse gas emissions figures from publicly sourced data. Comparison with 1.5 star not zoned ducted refrigerative system in a large size (220m²) 2-star pre 2005 house in a Melbourne climate, cooling all day on the weekend and in the mornings and evenings when internal temperatures are high.
6.This is an estimate based on the CO_2 calculation above and using the data from forestlearning.edu.au, 'Carbon and its storage in forest and wood products' article, published 2011. Calculation based on a spotted gum tree that sequestrates 72kg CO2/YR.

Harness the
power of
Breezair
By SEELEY INTERNATIONAL TM
AUSTRALIAN
DESIGNED, MADE
AND OWNED!

Number one in natural cooling!

A showcase of innovation

Australian engineering at it's finest. Breezair is Seeley International's premium, world-leading evaporative air conditioner brand, offering advanced technology and revolutionary design for fixed evaporative whole of home cooling.

The Breezair Evaporative air conditioner was the world's first corrosion-free, all-plastic rooftop cooler to be made, completely revolutionising the market in the early 80's. The move away from corroding metal parts, to durable plastic coolers became, and remains, the industry standard today.

Every element of the Breezair evaporative air conditioning system comes together to ensure that your family will enjoy the benefits of natural and energy efficient cooling.

Recent Breezair Industry Awards:

- Winner: Good Design Award 2020
- Winner: Energy Efficient Product of the Year 2019

World First Achievements:

- Contract won for world's largest order for Evaporative coolers, following 3 year tender process. Seeley International supplied 50,000 Breezair rooftop coolers to the Tent City in Mina Valley, Saudi Arabia, where summer temperatures can easily exceed 45°C.

Breezair benefits include:

- Patented Hushpower® direct drive InvertaCool® motor
- Patented ultra quiet centrifugal or axial fan configuration

The coolest, quietest and most energy efficient evaporative air conditioner range in the world![1]

COMPREHENSIVE 7 YEAR WARRANTY

This warranty has terms and conditions, including the requirement for regular servicing of the product in accordance with the owner's manual.

1.Based on published research articles, NATA certified laboratory test results and publicly sourced data.

Breezair range

Extraordinaire®

The Breezair Extraordinaire® has **redefined the future** for whole-of-home cooling.

- Available at selected Seeley International Dealers.
- Architecturally designed, with a sleek, single piece outer cover.
- Patented axial SuperStealth® fan delivers whisper quiet operation.
- Super-efficient InvertaCool® motor.
- Hugging every roof line, from 10 to 40 degrees.
- Comes with external air sensor, that displays current outside temperature.
- Breakthrough Black Magic® MINI-CELL[7] CHILLCEL® pad technology provides cutting edge cooling capacity and aesthetics.
- Intuitively optimises water and energy usage based on outside ambient conditions.

Extraordin Aire®

Never settle for ordinary!

Available colours[8]

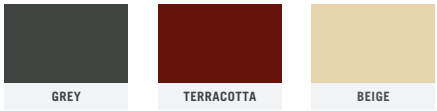

Supercool®

CLIMATE MASTERS of SEELEY INTERNATIONAL

Enjoy superior cooling with Breezair Supercool®

This premium range has extra thick Chillcel pads, producing up to 13% more cooling when compared to the Icon range.

- **Exclusive to Climate Masters of Seeley International Dealers**
- Comes with external air sensor, that displays current outside temperature.
- Intuitively optimises water and energy usage based on outside ambient conditions.

Icon®

The Breezair Icon® range is a proven high performer, cooling your whole home and saving you huge dollars on energy costs.

Available colours[8]

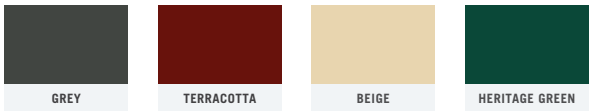

7.Patent pending. 8.Colours may vary. Heritage Green made to order.

Breezair by SEELEY INTERNATIONAL

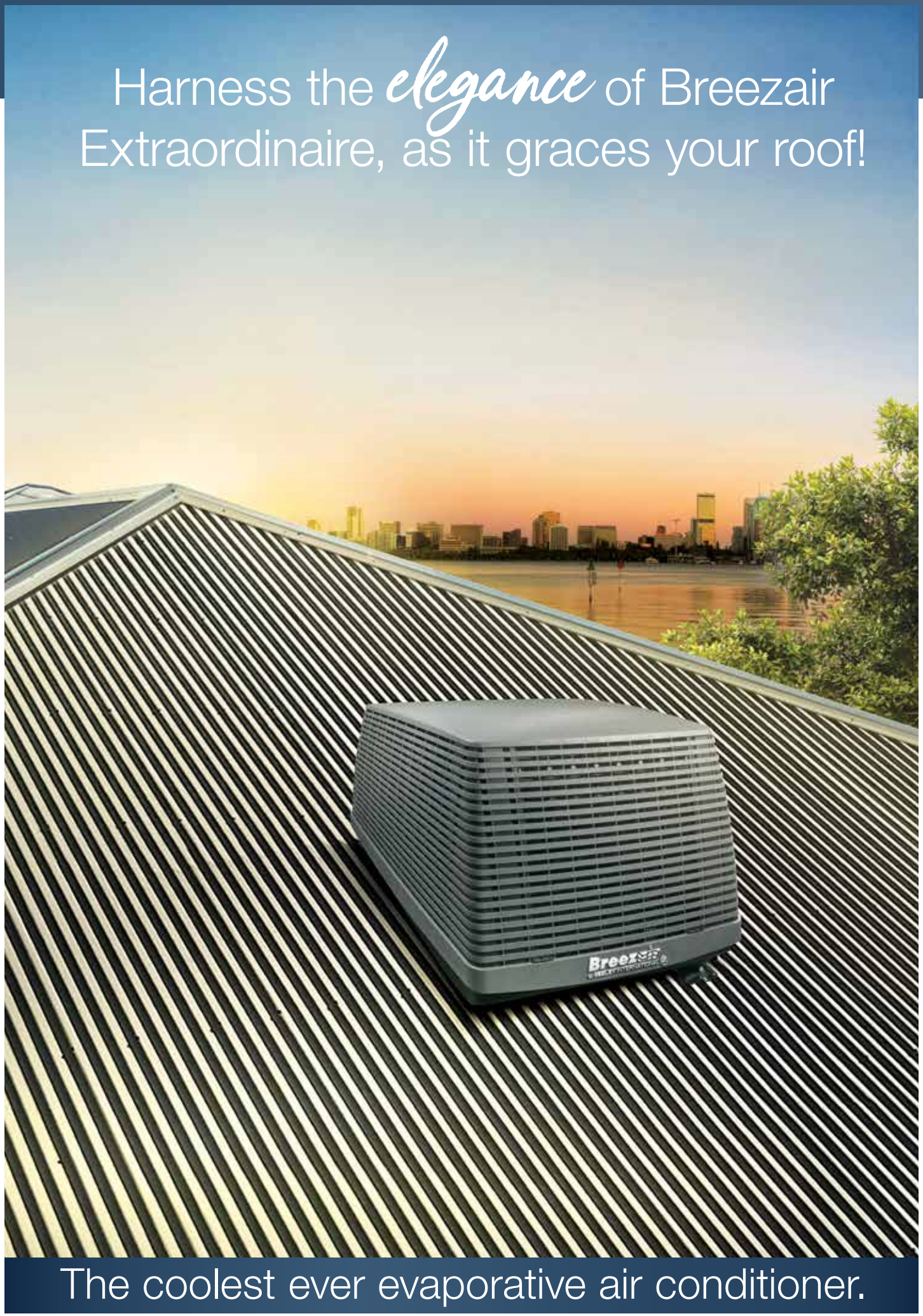
Harness the elegance of Breezair
Extraordinaire, as it graces your roof!
The coolest ever evaporative air conditioner.

Breezair

Features and benefits

Power control module helps save water and power

- Advanced electronics ensure maximum efficiency
- Microprocessor constantly analyses water quality, water consumption and power output
- Incredibly smart, exceptionally reliable and super-durable

Highly durable and non-corrodible outer casing

- High performance Permatuf® polymer construction will not corrode or rust.

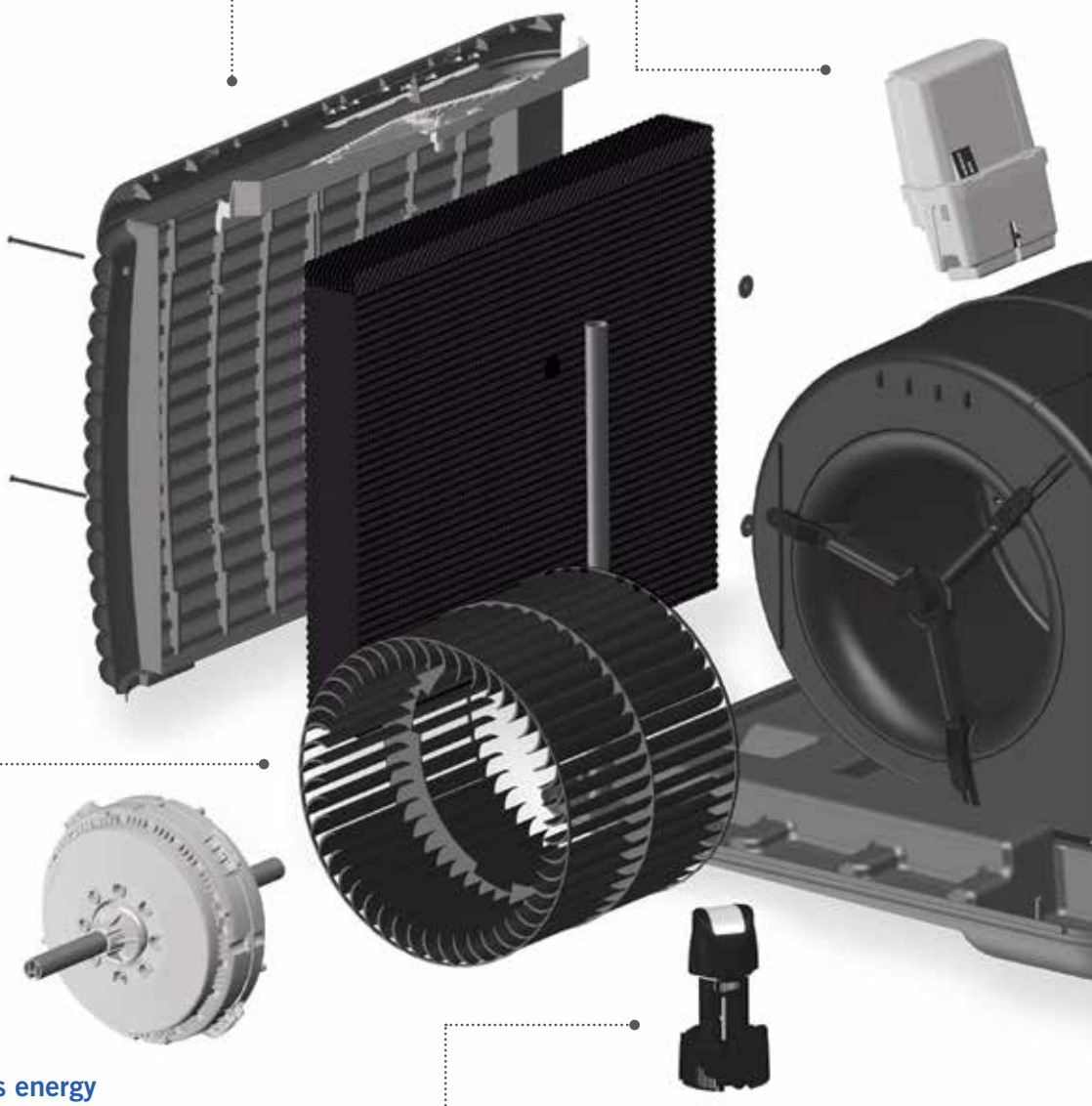

Icon® series fan is ultra-quiet

- Designed to deliver optimum air output at all times.
- Ultra-quiet centrifugal fan with 10 speeds.
- Use "Fan Only" mode (no water) to blow fresh air through the home and expel odours.

Hushpower® direct drive InvertaCool® motor uses less energy

- Exclusive to Breezair and manufactured in Australia.
- Incredibly quiet and efficient throughout itoperating range.
- Unsurpassed reliability.
- Corrosion proofed throughout with parts that won't rust.

Tornado® pump that won't block

- Australian designed and manufactured.
- Exceptional reliability in extreme conditions.
- Dual directional – it can't block!

Weather Seal® reduces draughts and dust

- Automatic sealing system.
- Reduces need for winter cover.

Drain and clean function

- Auto-cleanse™ - Automatic water draining when the system is not in use avoids algae growth.

Only available with selected MagIQtouch controller models. Regular maintenance (typically every 2 years for domestic use) is still required.

AUSTRALIAN DESIGNED, MADE AND OWNED!

Breakthrough Black Magic® MINI-CELL^ CHILLCEL® pad technology

- The only evaporative cooling medium of its kind. Fully manufactured in Australia to address the harsh Australian climate. It's an **absolute out-performer!**
- Exclusive small cell design provides cutting-edge high capacity cooling.
- Maintains our global leading Mini-Cell[7] Chillcel® pad technology, which increases surface area of the **fully wetted pads** by 25%, dramatically increasing cooling capacity and efficiency - **BEYOND BELIEF!**
- **Black Magic® MINI-CELL[7] CHILLCEL® pads** deliver superlative cooling and transformational aesthetics to your home, enabling the unit to blend seamlessly into its surroundings.

Watermiser® saves water

- Uses the minimum amount of water to achieve maximum high efficiency cooling.
- Water quality monitoring to maximise water savings.
- Leak detection when the unit is in use.

Exceptional water distribution, increases cooling effect

- Unique to Breezair, this Australian design ensures constant, even pad saturation increasing the cooling effect and outperforming competitor products.

Bushfire Protection

Firewall Ember Screen (optional extra)

- Helps guard against ember attack in bushfires.

Turn to **page 30** for more information.

7.Patent pending.

Harness the
power of
Braemar
By SEELEY INTERNATIONAL TM
AUSTRALIAN
DESIGNED, MADE
AND OWNED!

Inspirational comfort, combined with ultra-energy efficiency!

A reputation built on quality and endurance

Founded in 1938 and being the oldest of Seeley International's brands, Braemar remains one of Australia's most recognised and trusted brand names today.

Backed by an 80 year history of innovation and success, the Braemar range is the recipient of many industry awards, including:

- The prestigious Good Design Awards in 2018 for the Braemar Evolution range.
- The Product Design Award in 2016 for the SuperStealth®
- Winner of the prestigious 2016 Australian Business Award.

These Awards reflect Braemar's commitment to sustainability; recognising its reduced energy usage, ultra-low noise, and reduced impact on the environment.

Braemar benefits:

- Superstealth® Axial Fan
- InvertaCool® motor
- Trusted brand for over 80 years

COMPREHENSIVE 7 YEAR WARRANTY

This warranty has terms and conditions, including the requirement for regular servicing of the product in accordance with the owner's manual.

Braemar range

Evolution

With its low profile, superb design, the Braemar Evolution unobtrusively sits below the roof ridgeline to blend seamlessly with your home.

- InvertaCool® motor, using far less energy than a standard motor.
- Superstealth® axial fan.
- Ultra quiet.
- 24% more active chillcell cooling pad area than the Paradigm™ .
- The **Lowest Profile Range** of high-performers!

Available colours[8]

GREY | TERRACOTTA | BEIGE | HERITAGE GREEN

SuperStealth®
Invertair® Series

The world's first high performance inverter axial evaporative air conditioner with the highest cooling capacity and energy efficiency in the Braemar range.

- Ultra-quiet cooling.
- Outstanding high-performance cooling.
- Patented ultra quiet SuperStealth® fan (quieter than the standard stealth fan).

Available colours[8]

GREY | TERRACOTTA | BEIGE

Paradigm
Series™

Proven performer

- Braemar quality and reliability.
- High efficiency and cooling performance.
- Premium water management system.

Available colours[8]

GREY | TERRACOTTA | BEIGE | HERITAGE GREEN

8.Colours may vary, Heritage Green made to order.

Braemar by SEELEY INTERNATIONAL

Harness the *brilliance* of Braemar Evolution!

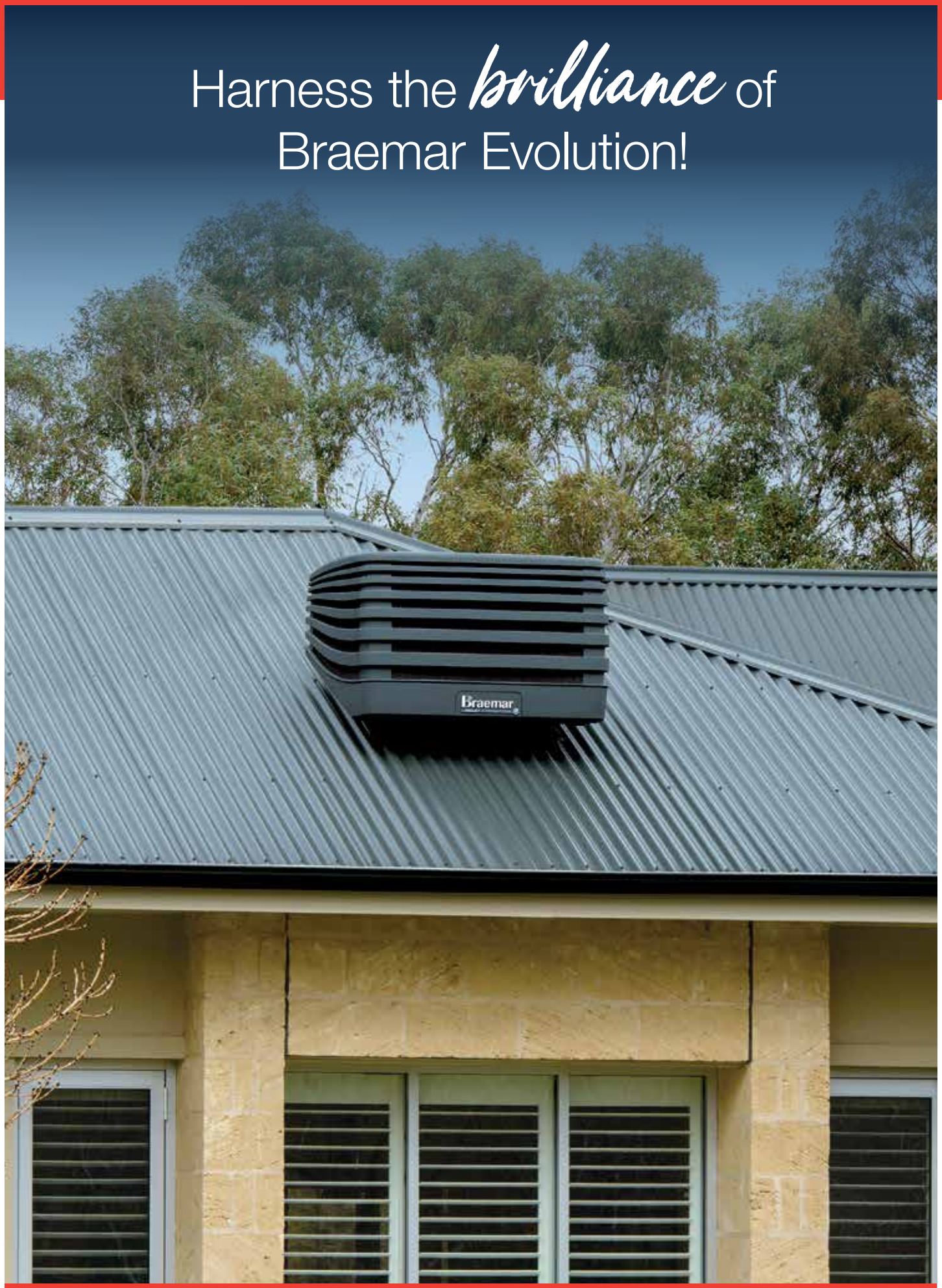

The coolest, compact, low profile air conditioner in the world.

Braemar

Features and benefits

Evolu

Exceptional water distribution

The water distribution system includes a combination of pressurised and free-flowing water systems, providing:

- Even water flow over the sides of the top pannel, ensures maximum pad area and maximum cooling at all times.
- Australian designed, world patented, free flow, water distributor ensures constant, even pad saturation increasing the cooling capacity and outperforming competitor products.

Breakthrough Black Magic® MINI-CELL[7] CHILLCEL® pad technology

- The only evaporative cooling medium of its kind. Fully manufactured in Australia to address the harsh Australian climate. It's an **absolute out-performer!**
- Exclusive small cell design provides cutting-edge, high capacity cooling in a class of its own.
- Maintains our global leading Mini-Cell[7] Chillcel® pad technology, which increases surface area of the **fully wetted pads** by 25%, dramatically increasing cooling capacity and efficiency - **BEYOND BELIEF!**
- **Black Magic® MINI-CELL[7] CHILLCEL® pads** deliver superlative cooling and transformational aesthetics to your home, enabling the unit to blend seamlessly into its surroundings.

Power control module helps save water and power

- Microprocessor constantly analyses water quality, water consumption and power output.

Tornado® pump that won't block

- Australian designed and manufactured.
- Exceptional reliability in extreme conditions.
- Dual directional – it can't block!

Auto Cleanse™ - Auto water draining keeps your system clean

- Empties the reservoir automatically when system is not in use, leaving it clean and dry.
- Ensures the system always operates at maximum efficiency, while using the minimum amount of water.
- Helps to reduce seasonal maintenance[9] as required by some other brands.

7.Patent pending. 9.Seasonal maintenance does not replace regular maintenance of the unit as required for peak performance.

ution

AUSTRALIAN DESIGNED, MADE AND OWNED!

UV stabilised and corrosion free

- The cabinet and water reservoir components are injection moulded structural foam polypropylene (Permatuf®) and are UV stabilised and non-corrodible.

SuperStealth® Technology
(Evolution & SuperStealth® models)

- Advanced aerodynamic design.
- SuperStealth® InvertaCool® motor and SuperStealth® fan for high energy efficiency and whisper quiet operation.

WaterManager™ saves water

- Uses the minimum amount of water to achieve high efficiency cooling.
- Water quality monitoring to maximise water savings.
- Keeps your system clean on the inside.

AutoWinterseal® reduces draughts and dust

- Automatically closes off the air conditioning ducts when not in use.
- Reduces winter chills entering your home.
- Ensures comfort all year round.

Bushfire Protection

Firewall Ember Screen (optional extra)

- Helps guard against ember attack in bushfires.

Turn to **page 30** for more information.

Harness the
power of
coolair
By SEELEY INTERNATIONAL ™
AUSTRALIAN
DESIGNED, MADE
AND OWNED!

Affordable, effective cooling

Accessible evaporative air conditioning

The Coolair Brand became part of the Seeley International suite in 1997 and was quickly redeveloped to incorporate the all-plastic, corrosion-free construction which Seeley had pioneered.

The brand maintains its ethos of affordable effective cooling; presenting a good, value for money unit for those wanting to enjoy the benefits of evaporative cooling, without the cost of more advanced features.

Unit Snapshot:

- Variable speed motor
- Axial fan
- Automatic drain valve optional

COMPREHENSIVE 5 YEAR WARRANTY

The warranty has terms and conditions, including the requirement for regular servicing of the product in accordance with the owner's manual. Coolair 5 Year only warranty applies to products purchased from October 1st 2020.

Coolair range

CPQ
Series

Coolair Evaporative air conditioners are very affordable, representing the CHEAPEST-HIGHEST-VALUE-FOR-MONEY coolers, which do not compromise on the renowned Seeley performance.

- Variable speed motor.
- State of the art axial fan.
- Contains a bleed valve for water management, suitable for harsh water quality regions.
- Proven track record for reliability and longevity.

Available colours[8]

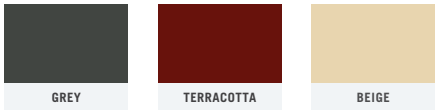

Coolair… Australia's greatest value for money home cooling!

- **Durability ensures long term trouble-free comfort!**
- **Efficiency, save up to 75% on energy costs[2].**
- **Australian designed, made and owned!**
- **Natural fresh, cool, clean, filtered air.**
- **NATA accredited test results substantiate superior product performance.**
- **Alfresco living with options for security vents so doors and windows can remain closed.**

2.Seeley International's calculation based on approximate running cost figures from publicly sourced data. Comparison with 1.5 star not zoned ducted refrigerative system in a large size (220m^2) 2-star pre 2005 house in a Melbourne climate, cooling all day on the weekend and in the mornings and evenings when internal temperatures are high, and an electricity tariff of 31.9c/kWh. Negligible water cost excluded. 8.Colours may vary, Terracotta made to order.

Harness the *heritage* of Coolair - keeping Australians beautifully cool for over 50 years!

Renowned cooling performance.

Coolair

Features and benefits

Exceptional water distribution increases cooling effect

Coolair's unique patented water distribution system means no clogging of the filter pads.

- Clever high efficiency pad wetting system.
- Total pad saturation for total cooling.
- **High performance cooling day and night.**

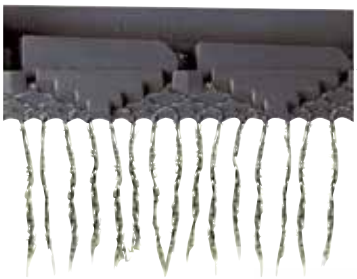

Tornado® pump that won't block

- Australian designed and manufactured.
- Built to outlast other less efficient conventional style pumps.
- Dual directional – it can't block!

Stealth® fan is whisper quiet

- Advanced aerodynamic design.
- Super quiet in operation.
- Produces **more** beautifully cool, quiet, refreshing breeze, and at a **fraction** of the running costs of alternatives!

Breakthrough Black Magic® Mini-cell[7] Chillcel® pad technology

The only evaporative cooling medium of its kind. Fully manufactured in Australia to address the harsh Australian climate. **It's an absolute out-performer!**

- Exclusive small cell design provides cutting-edge high capacity cooling.
- Maintains our global leading Mini-Cell[7] Chillcel® pad technology, which increases surface area of the **fully wetted pads** by 25%, dramatically increasing cooling capacity and efficiency - **BEYOND BELIEF!**
- **Black Magic® MINI-CELL[7] CHILLCEL® pads** deliver superlative cooling and transformational aesthetics to your home, enabling the unit to blend seamlessly into its surroundings.

7.Patent pending

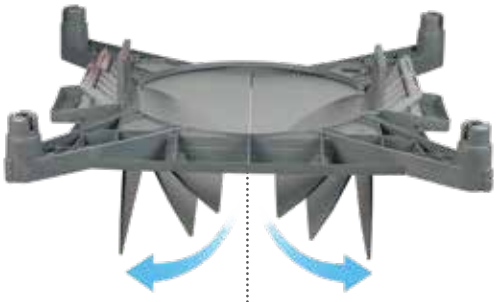

AutoWinterseal® reduces draughts and dust

- Automatically closes off the air conditioning ducts when not in use.
- Reduces winter chills entering your home.
- Ensures comfort all year round.

AUSTRALIAN DESIGNED, MADE AND OWNED!

Highly durable and non-corrodible outer casing

- Visually discreet, low profile.
- Integrates unobtrusively with the roof line.
- High performance Permatuf® polymer construction.
- Highly durable, will not corrode or rust.
- Available in a range of contemporary colours.

Auto water draining keeps your system clean (optional)

- Reduces the amount of seasonal maintenance with this optional feature[10].
- This clever device conserves water by retaining the system's water for up to 72 hours of non-operation.

Flexible control with MagIQcool®

The Coolair MagIQcool® controller is incredibly easy to use.

- Set your preferred temperature level on the clever wall mounted control and Coolair will do the rest - quickly, cleanly and reliably.
- Maintain your desired comfort level with four convenient modes to choose from - cool, vent, auto and timer.

Optional extra: MagIQtouch® Controller Touch screen technology

10.Regular maintenance (typically every two years for domestic use) is still required.

Breezair

Technical Specifications

InvertaCool® technology used in these models

Model	Cooling capacity (kW)	Airflow (L/s) at 80Pa[11]	Nominal power motor (W)	Width (mm)	Depth (mm)	Height – Front (mm)	Height – Rear (mm)	Operating weight (kg)
Available at selected Seeley International Dealers								
Extraordinaire XTR**3000**	**12.4**	2100	430	1160	1400	840	550	86
Extraordinaire XTR**4000**	**14.5**	2480	600	1160	1400	840	550	86
Extraordinaire XTR**5000**	**17.4**	2900	950	1160	1400	840	550	86

Model	Cooling capacity (kW)	Airflow (L/s) at 80Pa[11]	Nominal power motor (W)	Width (mm)	Depth (mm)	Height (mm)	Operating weight (kg)
Exclusive to CMSI Dealers							
Supercool EXS**160**	**11.4**	1720	550	1160	1160	860	94
Supercool EXS**180**	**13.1**	2060	750	1160	1160	860	94
Supercool EXS **200**	**14.3**	2320	1100	1160	1160	860	94
Supercool EXS**220**	**15.1**	2540	1500	1160	1160	860	94
Icon EXQ**150**	**10.8**	1720	550	1160	1160	860	90
Icon EXQ**170**	**11.6**	2070	750	1160	1160	860	90
Icon EXQ**190**	**13.8**	2290	1100	1160	1160	860	90
Icon EXQ**210**	**14.5**	2540	1500	1160	1160	860	91

Braemar

Technical Specifications

Model	Cooling capacity (kW)	Airflow (L/s) at 80Pa[11]	Nominal power motor (W)	Length (mm)	Width (mm)	Height – Front (mm)	Height – Rear (mm)	Operating weight (kg)
Evolution LPQI**250**	**8.4**	1510	340	1150	1150	730	380	86
Evolution LPQI**350**	**10.4**	2010	430	1150	1150	730	380	86
Evolution LPQI**450**	**11.8**	2390	600	1150	1150	730	380	86
Evolution LPQI**550**	**13.2**	2850	950	1150	1150	730	380	86

Model	Cooling capacity (kW)	Airflow (L/s) at 80Pa[11]	Nominal power motor (W)	Length (mm)	Width (mm)	Height (mm)	Operating weight (kg)
SuperStealth LCQI**250**	**8.1**	1500	340	1150	1150	685	88
SuperStealth LCQI**350**	**9.9**	1990	430	1150	1150	685	88
SuperStealth LCQI**450**	**13.5**	2620	600	1150	1150	835	91
SuperStealth LCQI**550**	**14.3**	3070	950	1150	1150	835	91
Paradigm LCQ**350**	**10.2**	1980	430	1150	1150	685	80
Paradigm LCQ**450**	**13.2**	2560	600	1150	1150	835	89
Paradigm LCQ**550**	**14.1**	2810	950	1150	1150	835	91

Refer to page 6 for details of benefits.

11.Airflow performances at 80Pa - the equivalent duct static pressure of typical ducted residential multiple outlet installations.
The above data was drawn from Meridian Test Laboratory's test analysis. The testing was performed by a NATA accredited laboratory to the requirements of the Australian standard AS2913-2000 "Evaporative Air Conditioning Equipment." Achievable with ambient 38 °C DB, 21 °C WB, room temperature 27.4 °C.

Coolair

Technical Specifications

Model	Cooling capacity (kW)	Airflow (L/s) at 80Pa[11]	Nominal power motor (W)	Width (mm)	Depth (mm)	Height (mm)	Operating weight (kg)
CPQ**450**	**8.0**	1570	340	1150	1150	685	78
CPQ**700**	**9.5**	2000	430	1150	1150	685	79
CPQ**850**	**11.8**	2560	600	1150	1150	835	87
CPQ**1100**	**13.3**	2710	750	1150	1150	835	89

How do I choose?

The airflow, and size of the area you wish to cool, will be the largest determinants of which model is best suited to your needs. Whilst it may seem that bigger can only be better, a correctly sized air conditioner for your home will run far more efficiently, which equates to maximised electricity cost savings.

- **Is your home well insulated?** This is a key consideration, as it impacts your home's ability to maintain its temperature. A well insulated home may need a lower capacity unit, in comparison to a poorly insulated home.
- **What climate will your home operate in?** The hotter the climate, the greater the demand on your air conditioning.
- **What additional benefits are important to you?** Seeley International evaporative air conditioners offer additional technology benifits like winter seals, SuperStealth® fans, inverter motors, water savers, and architecturally designed units for greater aesthetic appeal.

CLIMATE MASTERS of SEELEY INTERNATIONAL

The Breezair Supercool® range is available exclusively through Climate Masters of Seeley International Dealers.

Harness the *simplicity* of MAGIQTOUCH® controller

Touch screen technology

Smart, sophisticated and incredibly intuitive, your MagIQtouch® controller makes operating your evaporative air conditioner a breeze. Control the temperature, fan speed and many more features on a user friendly touch screen. The discreet and modern design will blend seamlessly into the décor of your home.

Main Features

Program mode
Programmable 7 day, 4 time period program, customisable to suit your lifestyle (including a temporary over-ride function).

Energy saving quiet night mode
A comfortable nights sleep that won't cost the earth. The energy saving quiet night mode automatically reduces fan speed during the night for even greater economy at lower noise levels.

Manual mode
Manually control temperature and/or fan speed settings, at will.

Cooling & Heating
Control both your cooling and heating from one MagIQtouch® controller.

Auto-clean™ Function
World's first fully automated pad cleansing capability enables you to set and forget, ensuring your cooling pads remain clean, fresh and functional all summer long, season after season.[12]

Useful settings
Access additional features such as child lock, and servicing information.

Optional Extra: Magiqtouch® Air Sensor

The MagIQtouch® Air Sensor monitors temperature and humidity levels. It allows you to mount your MagIQtouch® controller in the most convenient place in your home, as the MagIQtouch® Air Sensor will then take over temperature control from the MagIQtouch® controller. This can then be located in the best place in the house to ensure ultimate cooling comfort for everyone.

Wi-Fi Smart app[13]

Control your cooling comfort needs directly from your mobile device! For example, turn on your cooler wherever you are, ensuring you come home to a cool home on those hot summer days. The smart app is free and available for download on your smartphone.

Smart home integration[13]

Control temperature and fan speeds with your voice through Amazon[14] Alexa or Google Assistant[15] technologies.
Voice commands are easy and simple to use, like "Alexa, turn on my Cooler" or "Hey Google, set the Cooler to 21 degrees".

12.Only for cooler models fitted with the water management system. Ask your dealer for further information.
13.Requires MagIQtouch® wall control, MagIQtouch® Wi-Fi smart kit and MagIQtouch® account to operate. Additional costs may apply.
14.Requires Wi-Fi, Google Account and a compatible device. Google and Google Home are trademarks of Google LLC. Additional costs may apply.
15.Requires Wi-Fi, Amazon Account and a compatible device. Additional costs may apply.

Harness the *power* of wifi and wireless

Controller upgrade options

Wireless:

- Battery operated Wireless Controller using Radio Frequency technology.
- Ideal for renovations, or where access for cabling is limited.
- Easier to install, the RF option also provides up to 2 master controllers.
- Can control the entire system from 2 locations, rather than 1; an ideal solution for larger, or two storey homes.

Wifi Enabled[16]:

- **Take complete control of your comfort at home, at all times.**
- Upgrade to a WI-FI module to work with your wired-in MagIQtouch® Controller,[17] enabling you to control your heating directly from your personal device through our smart app.
- The Smart app is available on Android and IOS devices.
- Integrate into voice activated smart home controls like Google Home and Amazon Alexa.

16.Requires MagIQtouch® WI-FI kit, compatible MagIQtouch® controller and MagIQtouch® account to operate. Additional costs may apply.
17.MagIQtouch® WI-FI Module is not compatible with MagIQtouch Wireless Controller. Existing installations including a MagIQtouch® controller may need to be upgraded if purchasing the WI-FI module. Additional costs may apply.

works with the Google Assistant

JUST ASK amazon alexa

Google Home

amazon echo

GET IT ON Google Play

Download on the App Store

Available for download now on iOS and Android

Additional Information

Combined heating and cooling solution

A Seeley International Ducted Gas Heater will complement your Evaporative cooling system:

- Warm and cosy in winter; fresh and cool in summer!
- MagIQtouch® controller will seamlessly control **both** heater and cooler systems.
- Braemar has the highest efficiency star ratings in Australia for ducted gas heating[18]

Keep your home secure

Did you know you can cool your home without leaving your doors and windows open?

Cost effective and easy to install, the **Security Relief Vent™** allows you to run your evaporative air conditioner while you are out, with all your windows and doors safely closed and locked.

Your home will **stay** cool, because the **cool** exhaust air is released into the hot roof space, cooling everything while you're out.

When you return home, if you wish, simply open up your windows and doors as normal - either way, you will **maintain** the delivery of fresh, cool air **throughout** your home.

Bushfire protection

Firewall Ember Screen (optional extra)

- Helps guard against ember attack in bushfires.
- Made from non-combustible mesh.
- Maximum aperture of 2mm.
- Can be fitted to existing cooler pad frames.
- Minimal reduction in air flow of around 5%.
- To meet BAL ratings, the cooler **also** requires a Firewall Auto Seal installed.
- Fitting both Ember Screen and Auto Seal to comply with BAL ratings will reduce airflow by up to 15%.

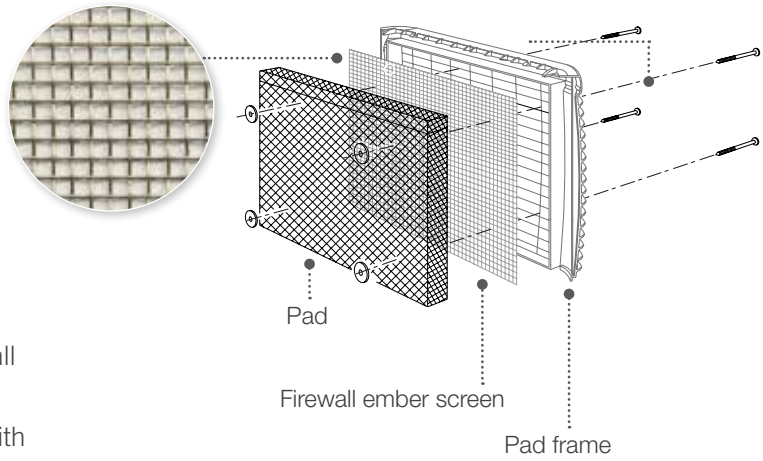

Warranty Terms

7 Year Warranty - Breezair & Braemar

7 year Comprehensive Warranty[19], 10 year cover on all structural components, plus a hefty 25 year cover against corrosion, on its Permatuf ® cabinet.

Scheduled maintenance service as per owners manual.

4th year Scheduled maintenance service, performed, and charged for, by Seeley International or its nominated appointee.

Scheduled maintenance service as per owners manual.

19. The 7 year comprehensive warranty is available **only** if the product is first purchased from Seeley International, by Seeley International Participating Dealers **and not** through distributors/wholesalers or trade installers.

Warranty is calculated at 7 years from date of purchase.

The warranty has terms and conditions, including the requirement for regular servicing of the product in accordance with the owner's manual.

5 Year Warranty - Coolair[20]

5 year Warranty, 10 year cover on all structural components, plus a hefty 25 year cover against corrosion, on its Permatuf ® cabinets.

Scheduled maintenance service as per owners manual.

Scheduled maintenance service as per owners manual.

Register your warranty and go into the draw to win a prize worth $500[21].

Prize includes 2 free services (up to the value of $400) and a $100 eftpos gift card

All you need is your home owners' manual.

Visit *seeleyinternational.com/warranty* and follow the prompts.

Have your serial number ready.

18. 3 to 6 star, and 7 star equivalent products.
20.Coolair 5 Year only warranty applies to products purchased from October 1st 2020.
21.Terms and conditions apply.

See: https://www.seeleyinternational.com/residential/support/warranty-prize-draw-winners/ for more information, including the dates of the promotion.

SEELEY INTERNATIONAL

Harness the *power* of nature

Breezair By SEELEY INTERNATIONAL | Braemar By SEELEY INTERNATIONAL | coolair By SEELEY INTERNATIONAL | Supercool By SEELEY INTERNATIONAL

The Climate Wizard By SEELEY INTERNATIONAL | Coolerado By SEELEY INTERNATIONAL | AIRA By SEELEY INTERNATIONAL | INTEGRATED COMFORT INC. By SEELEY INTERNATIONAL

BREEZAIR
Ducted Evaporative Air Conditioning

BRAEMAR
Ducted Evaporative Air Conditioning | Ducted Gas Heating
Reverse Cycle Air Conditioning | Gas Wall Furnaces and Space Heaters

THE CLIMATE WIZARD
Micro-Core® Technology

SUPERCOOL
Ducted Evaporative Air Conditioning

COOLAIR
Ducted Evaporative Air Conditioning

COOLERADO
Indirect Evaporative Air Conditioning

AIRA
Direct and Indirect Evaporative Air Conditioning | Ducted Gas Heating
Commercial Gas Space Heating | Energy Recovery Systems

INTEGRATED COMFORT INCORPORATED (ICI)
Dual Cool® Patented Dual Evaporative pre-cooling products

seeleyinternational.com/residential

1300 360 815

2022

Seeley International Pty Ltd
ABN 23 054 687 035
112 O'Sullivan Beach Road, Lonsdale, SA 5160
Phone: (08) 8328 3850 Fax: (08) 8328 3950
Email: enquiries@seeleyinternational.com
seeleyinternational.com

Information in this brochure was correct at the time of preparation. E & OE

variety the children's charity

With the generous support of our Australasian dealers we are proud to be the National Variety Bash partner supporting kids in need across Australia.

bsi. ISO 9001 Quality Management

Cat No BML01 REV B DEALER (0921)